GREATER

Erasmus+

Co-funded by the European Union

GROWING RWANDA ENERGY AWARENESS THROUGH HIGHER EDUCATION

September 17, 2025

BEYOND THE GRID: Renewables, IOT and SOCIAL EMPOWERMENT

INES-Ruhengeri

Institute of Applied Sciences

GLOBAL GOALS WEEK 2025

OUTLINE

- SDG Global week
- Introduction to GREATER Project
- Living Labs
- INES & Renewable energy: GREATER contribution
- INES Living Lab in Busengo
- Transfer activities
- Challenges and opportunities
- Community outreach

GREATER
INES-Ruhengeri
Institute of Applied Sciences
UNIVERSITÀ DI PARMA
Erasmus+
Co-funded by the European Union
GLOBAL GOALS WEEK 2025

OUTLINE

- **SDG Global week**
- Introduction to GREATER Project
- Living Labs
- INES & Renewable energy: GREATER contribution
- INES Living Lab in Busengo
- Transfer activities
- Challenges and opportunities
- Community outreach

GREATER

INES-Ruhengeri
Institute of Applied Sciences

UNIVERSITÀ DI PARMA

Erasmus+
Co-funded by the European Union

GLOBAL GOALS WEEK 2025

SDG Global Goal Week @ Ines

In 2015, the countries of the United Nations made a universal promise to leave no one behind in achieving a peaceful and prosperous world by 2030.



GREATER

INES-Ruhengeri
Institute of Applied Sciences

UNIVERSITÀ DI PARMA

Erasmus+
Co-funded by the European Union

GLOBAL GOALS WEEK 2025

SDG Global Goal Week @ Ines

GLOBAL GOALS WEEK

Global Goals Week is a shared commitment between 170+ Supporters across civil society, business, academia, and the UN system to accelerate action on the Sustainable Development Goals (SDGs), especially during the UN General Assembly High-level Week. It is also an opportunity to speak out as one voice, share ideas and transformative solutions in the fight to recover better from global challenges.

GREATER

INES-Ruhengeri
Institute of Applied Sciences

UNIVERSITÀ DI PARMA

Erasmus+
Co-funded by the European Union

GLOBAL GOALS WEEK 2025

OUTLINE

- SDG Global week
- **Introduction to GREATER Project**
- Living Labs
- INES & Renewable energy: GREATER contribution
- INES Living Lab in Busengo
- Transfer activities
- Challenges and opportunities
- Community outreach

GREATER

INES-Ruhengeri
Institute of Applied Sciences

UNIVERSITÀ DI PARMA

Erasmus+
Co-funded by the European Union

GLOBAL GOALS WEEK 2025

GREATER project rationale

- **UN Sustainable Development Goals:**



- **Erasmus+ priorities:**
  - Environment and Fight against climate change
  - Digital transformation
- **Supporting Rwanda energy transition and equal energy access:**
  - improving HEIs' education capacity
  - bridging academy and community
  - effective diffusion of clean, renewable energy and green practices
  - boosting green business

GREATER

INES-Ruhengeri
Institute of Applied Sciences

UNIVERSITÀ DI PARMA

Erasmus+
Co-funded by the European Union

GLOBAL GOALS WEEK 2025

GREATER project rationale

- Electric energy is a key enabler
- Huge inequalities in electricity access
- Energy poverty is a strong limitation to development

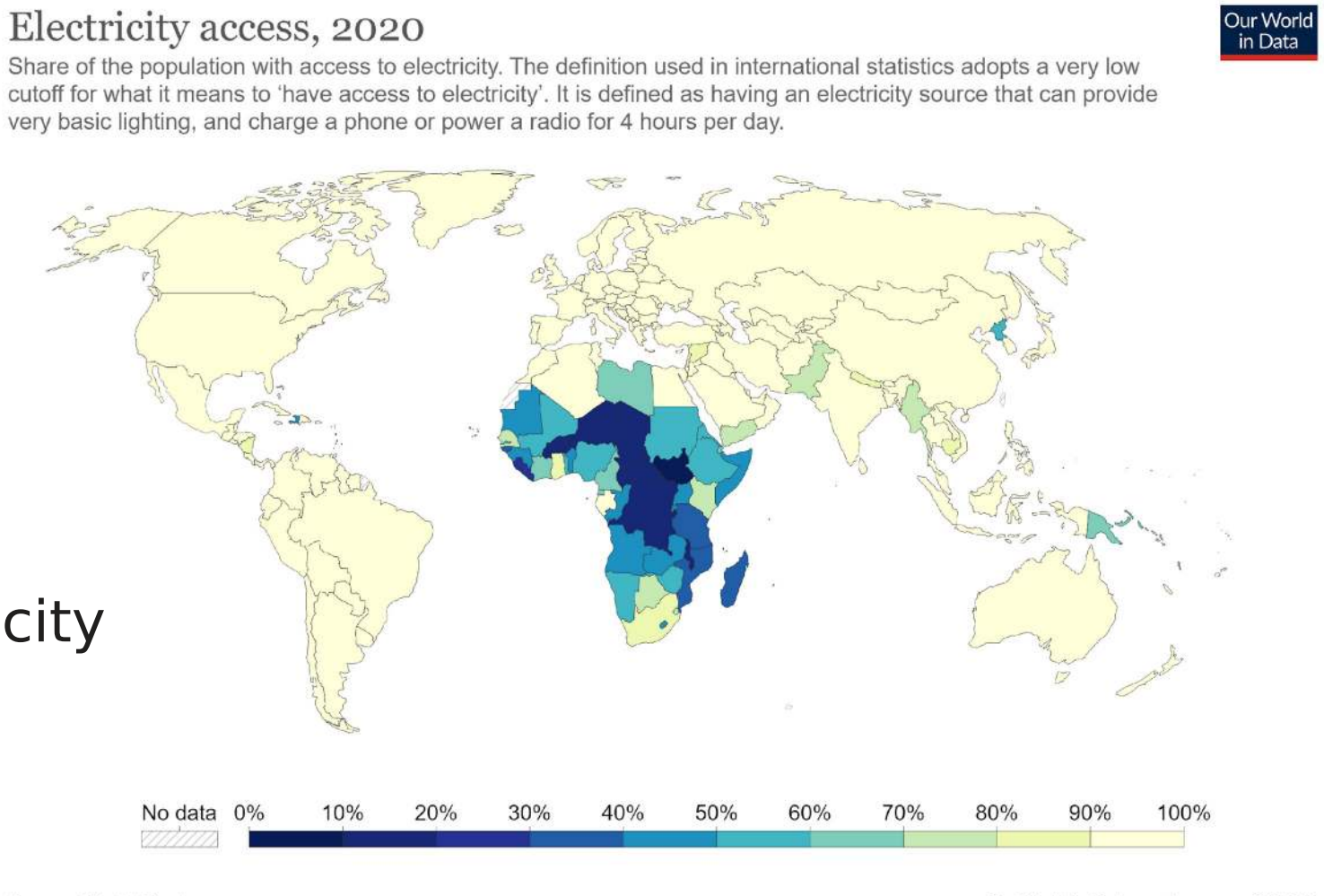

GREATER

INES-Ruhengeri
Institute of Applied Sciences

UNIVERSITÀ DI PARMA

Erasmus+
Co-funded by the European Union

2025

GREATER project rationale

- Rwanda electricity access rate is rapidly growing
- Still problems:
  - rural areas
  - limited energy availability

- June 22:
  - 72% households electrified
    - 50% on-grid
    - 22% off-grid (mostly PV)

- 2024 plans:
  - 100% households electrified
    - 52% on-grid
    - 48% off-grid

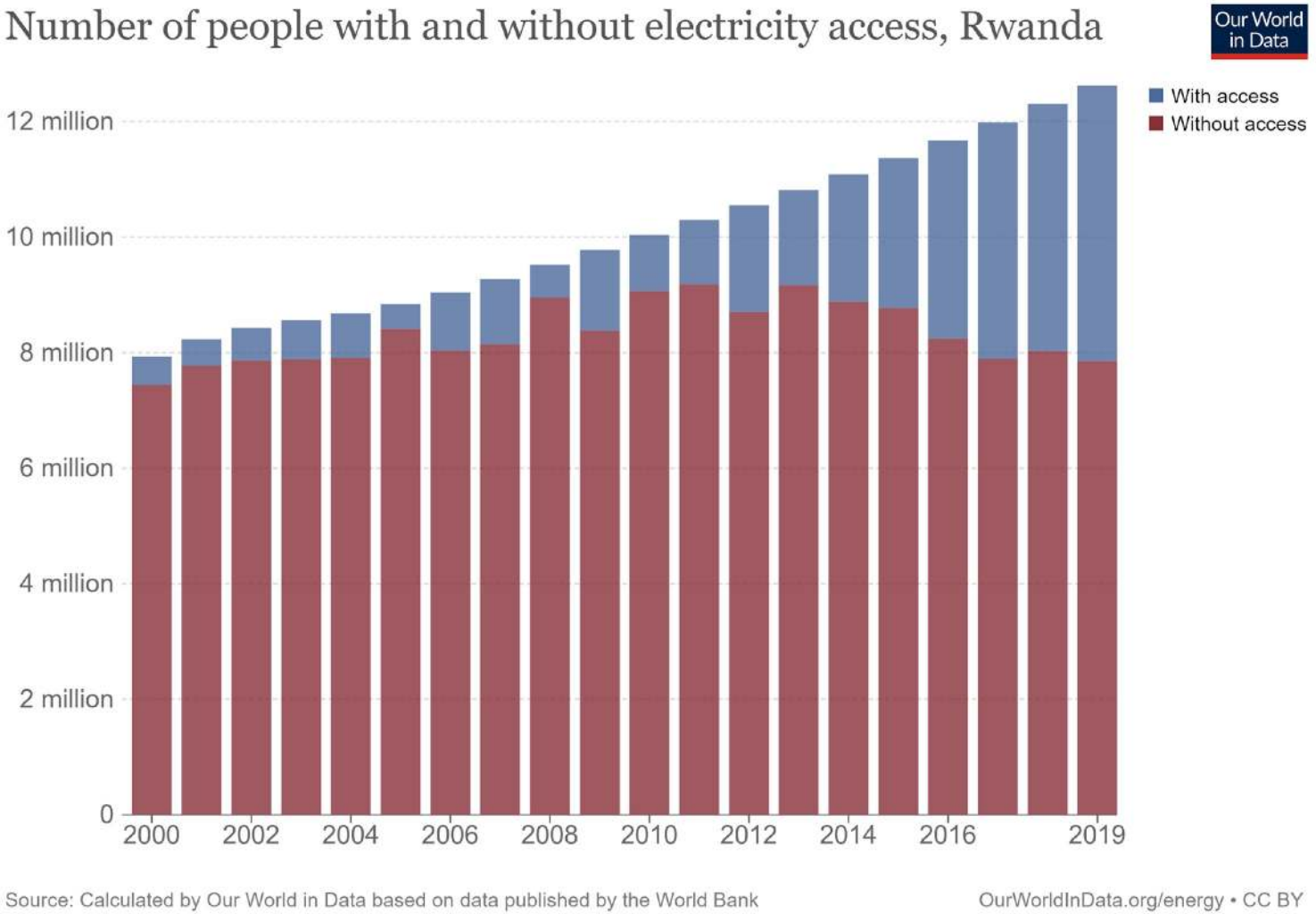

GREATER

INES-Ruhengeri
Institute of Applied Sciences

UNIVERSITÀ DI PARMA

Erasmus+
Co-funded by the European Union

2025

GREATER project rationale

- Rwanda electricity access rate is rapidly growing
- Still problems:
  - rural areas
  - limited energy availability

- June 22:
  - 72% households electrified
    - 50% on-grid
    - 22% off-grid (mostly PV)

- 2024 plans:
  - 100% households electrified
    - 52% on-grid
    - 48% off-grid
- **February 2025:**
  - **82.2% households electrified**
    - **57.4% on-grid**
    - **24.8% off-grid (mainly solar)**

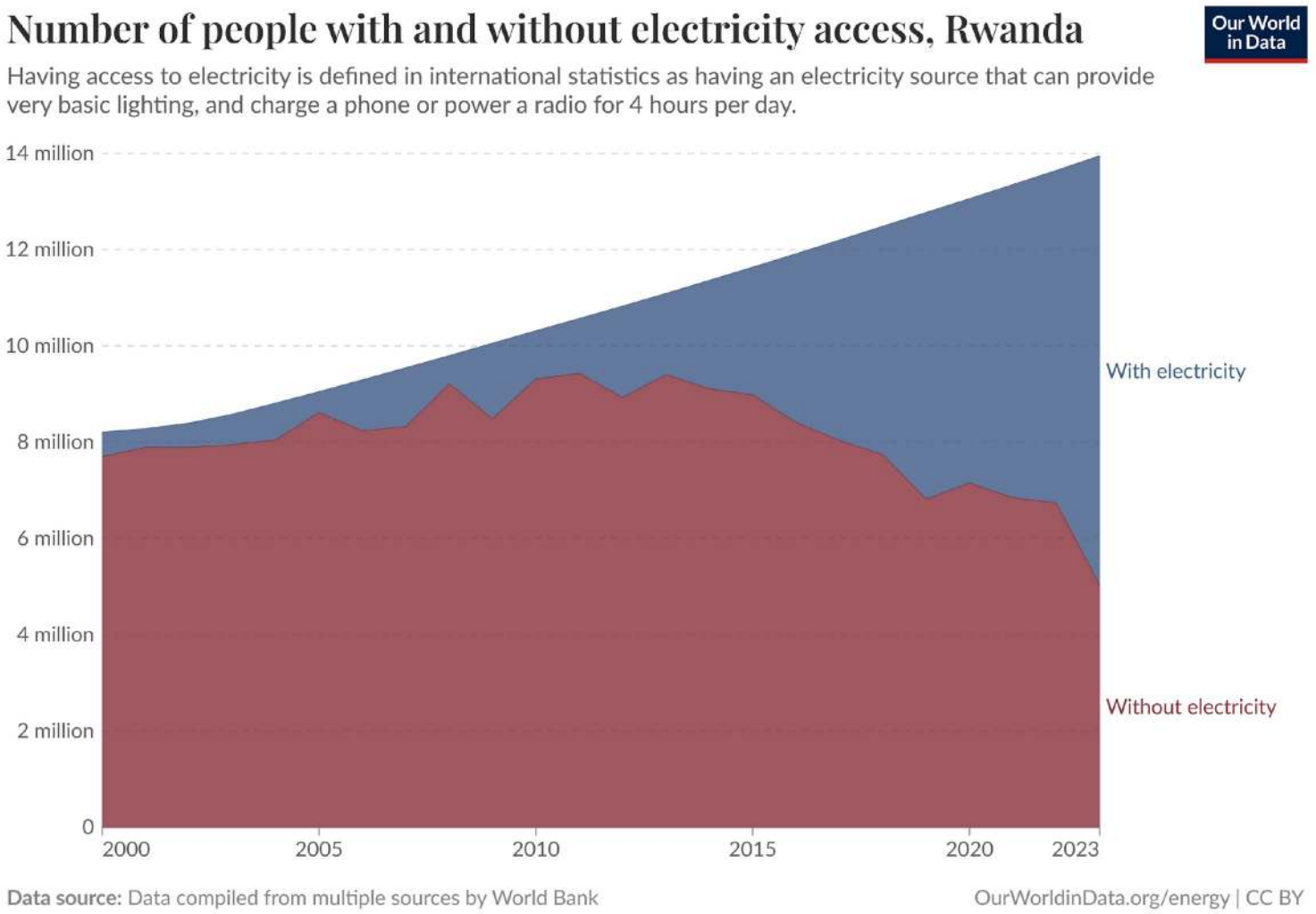

GREATER

INES-Ruhengeri
Institute of Applied Sciences

UNIVERSITÀ DI PARMA

Erasmus+
Co-funded by the European Union

2025

GREATER project rationale

- More energy is being produced
- Population is increasing as well
- Available energy still limited

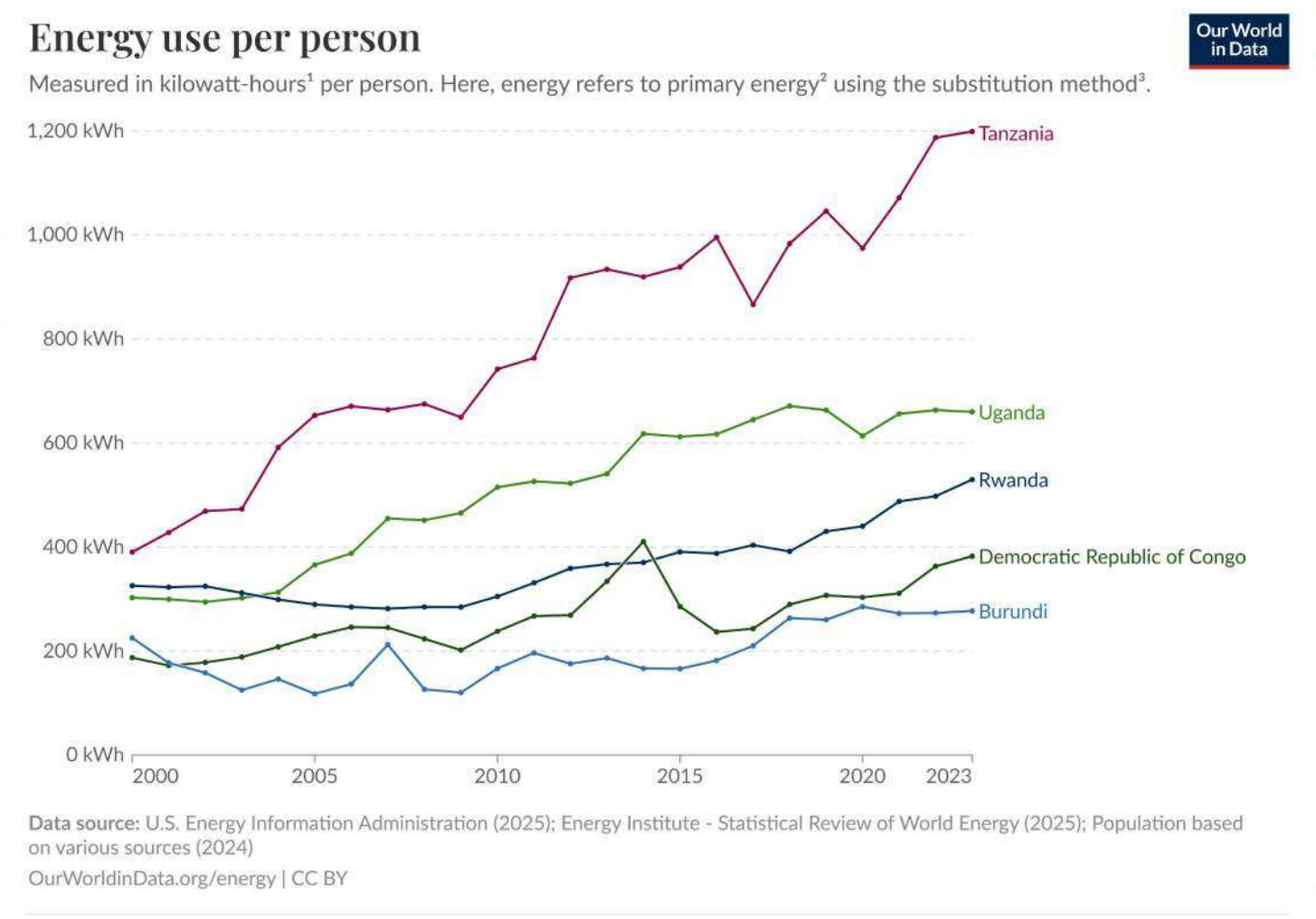

GREATER

INES-Ruhengeri
Institute of Applied Sciences

UNIVERSITÀ DI PARMA

Erasmus+
Co-funded by the European Union

GLOBAL GOALS WEEK 2025

GREATER project rationale

- Rwandan per capita energy use:
  - 53 times less than Italy
  - 91 times less than Germany
  - 144 times less than US

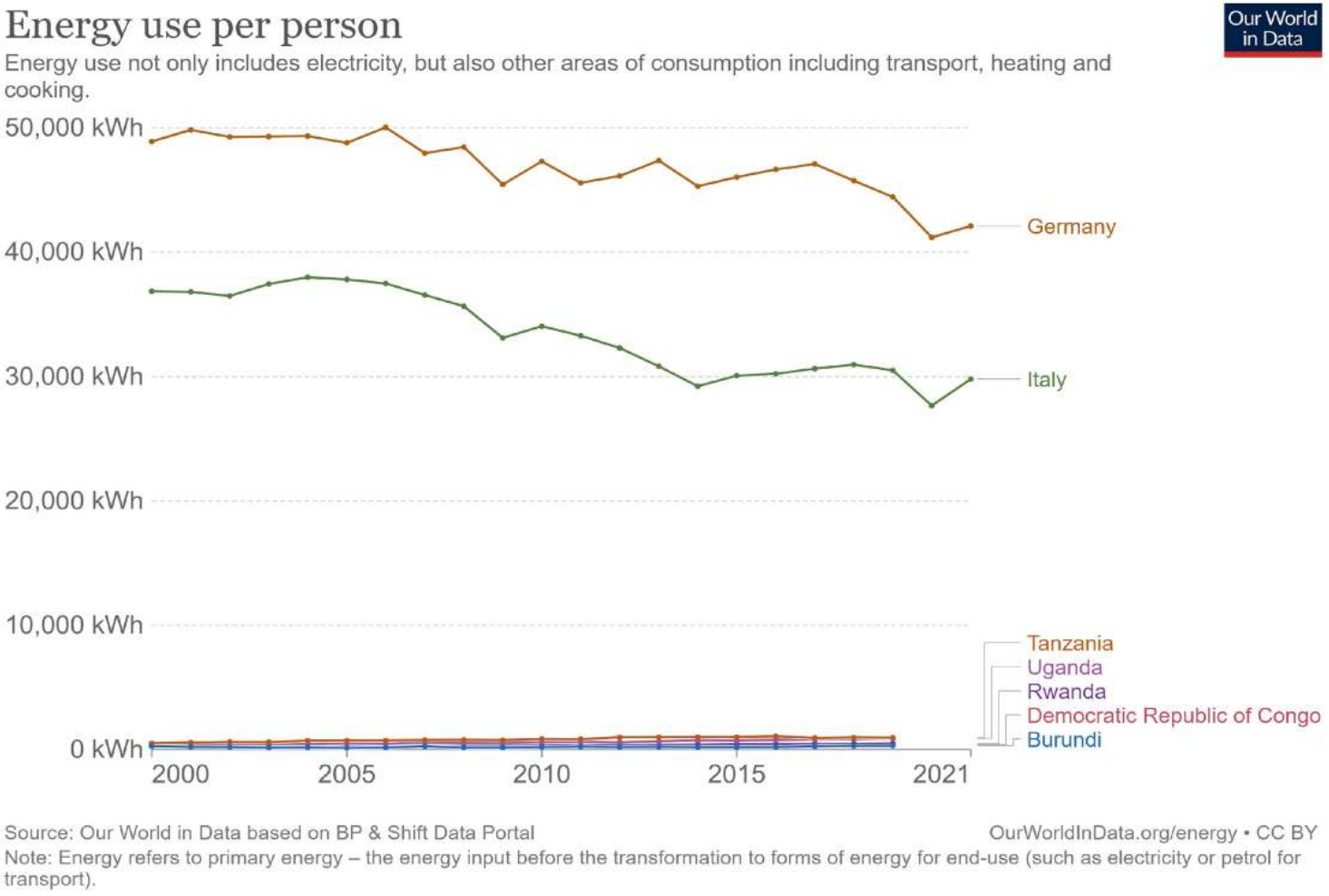

GREATER

INES-Ruhengeri
Institute of Applied Sciences

UNIVERSITÀ DI PARMA

Erasmus+
Co-funded by the European Union

GLOBAL GOALS WEEK 2025

GREATER project rationale

- Need more energy, but:
  - clean
  - safe
  - sustainable

(carbon neutrality to be achieved by 2050)

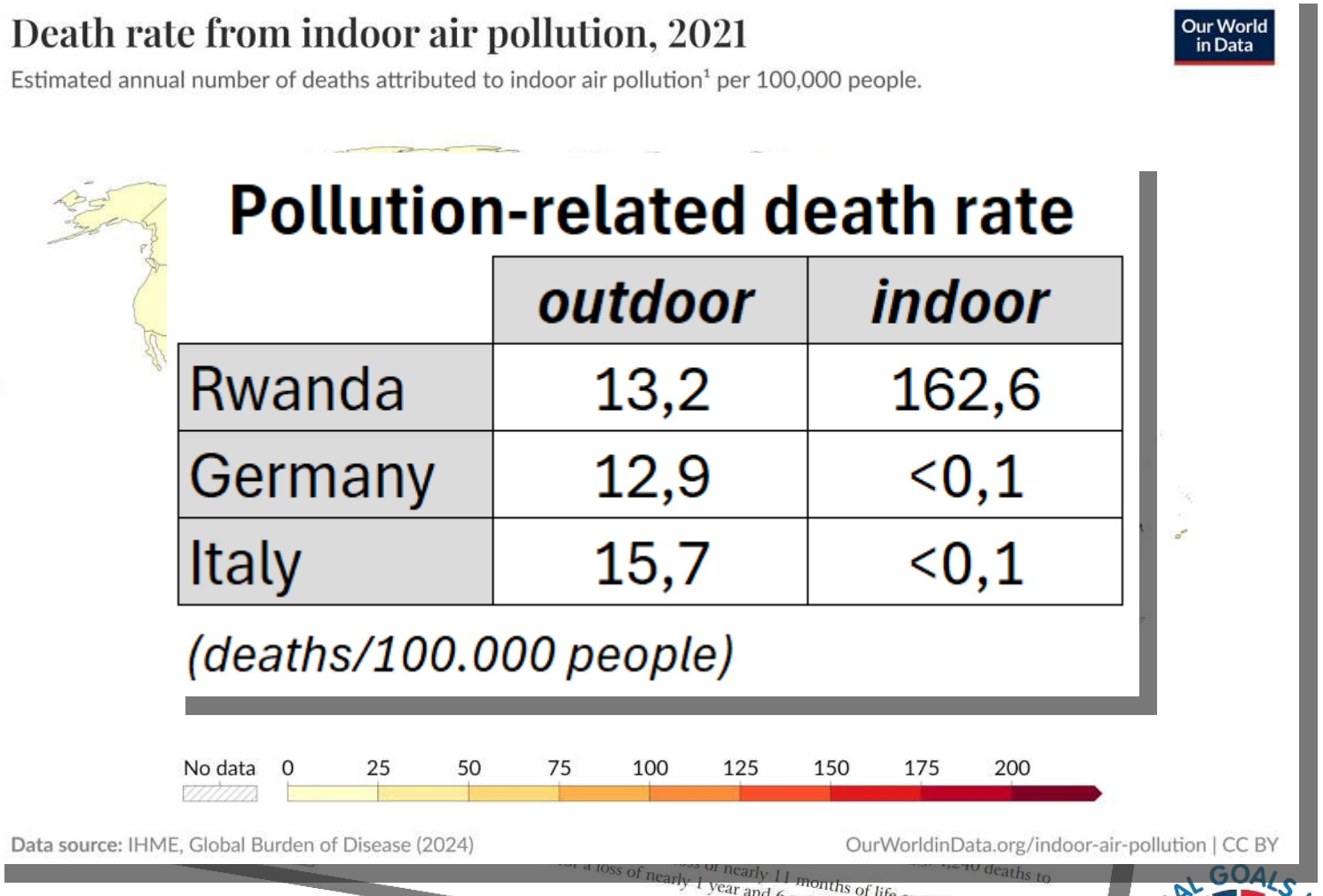

GREATER

INES-Ruhengeri
Institute of Applied Sciences

UNIVERSITÀ DI PARMA

Erasmus+
Co-funded by the European Union

GLOBAL GOALS WEEK 2025

GREATER project rationale

- On a qualitative ground, Rwanda is “doing better” than Europe already
- Quantitatively, access rate and energy production need boost

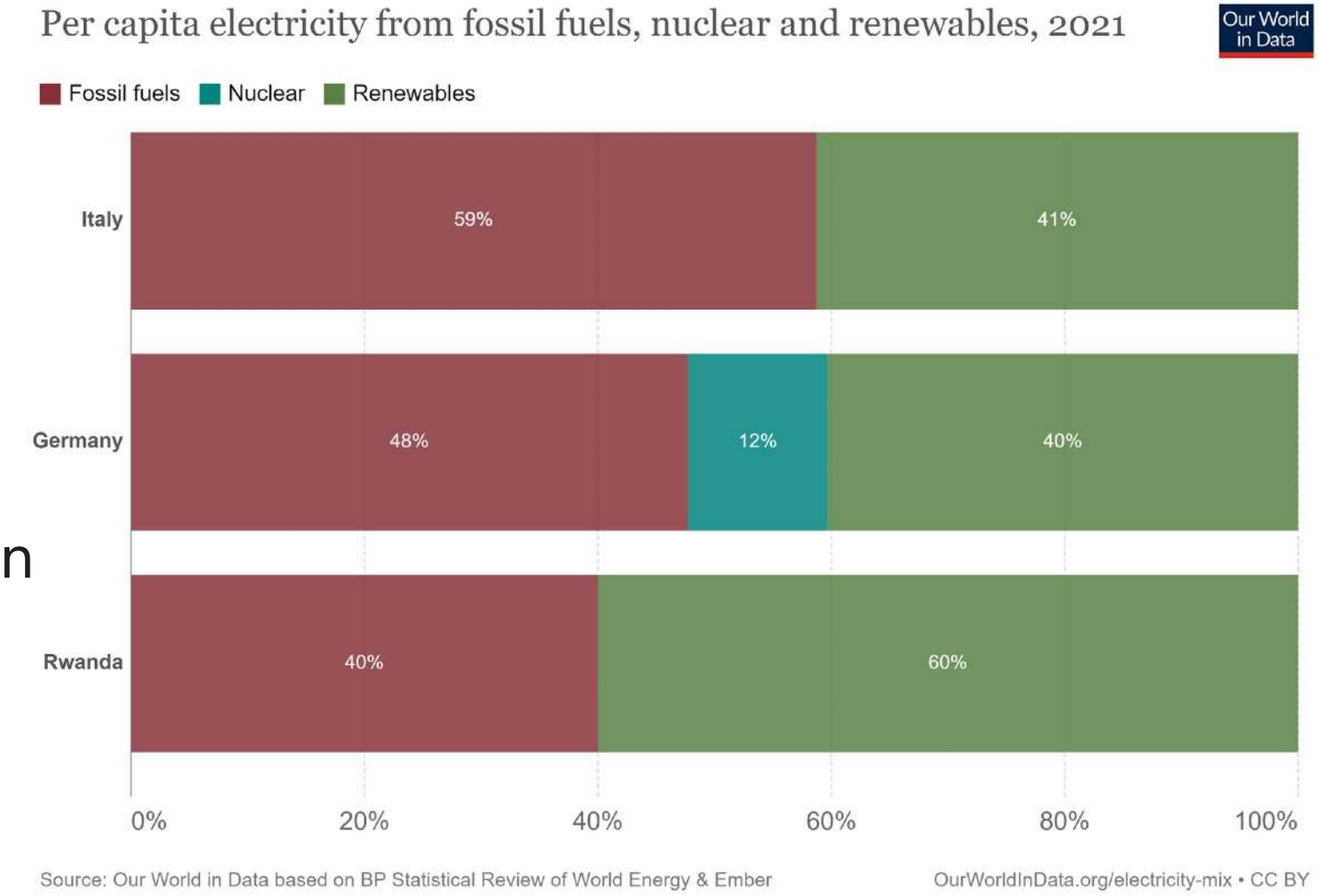

GREATER

INES-Ruhengeri
Institute of Applied Sciences

UNIVERSITÀ DI PARMA

Erasmus+
Co-funded by the European Union

2025

GREATER project rationale

RENEWABLE ENERGY allows for:

- Fast and widespread deployment
- Less infrastructure
- Inexpensiveness
- Environmental friendliness

Key factors for effective exploitation of RE:

- Affordable, reliable and modern technologies
- Availability of skilled professionals
- Environmental awareness

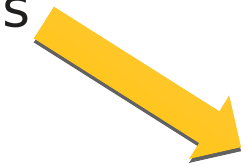



GREATER
INES-Ruhengeri
Institute of Applied Sciences
UNIVERSITÀ DI PARMA
Erasmus+
Co-funded by the European Union
GLOBAL GOALS WEEK 2025

GREATER project FIGURES

Erasmus+ Programme
Call: Capacity building in the field of higher education (ERASMUS-EDU-2022-CBHE)

Submitted: February 2022
Selected: September 2022 (*overall success ratio: 18%*)
Grant finalized: December 2022

Project start: January 1, 2023
Project end: December 31, 2025

Project cost: 887.295,60 €
EU max contribution: 798.566,00 €

Erasmus+

Co-funded by the European Union

GREATER

INES-Ruhengeri
Institute of Applied Sciences

UNIVERSITÀ DI PARMA

Erasmus+ Co-funded by the European Union

GLOBAL GOALS WEEK 2025

GREATER project Partnership

University of Parma
Parma, Italy

University of Rwanda
Kigali, Rwanda

University of Technology and Arts
Byumba, Rwanda

Hochschule Niederrhein
Krefeld, Germany

Rwanda Polytechnic
Tumba, Rwanda

Hochschule Bonn-Rhein-Seig
Sankt Augustin, Germany

INES- Ruhengeri
Musanze, Rwanda

CNR - IMEM
Parma, Italy

Co-funded by the European Union

GREATER project objectives

- **Education of skilled professionals in the Renewable Energy field:**
  - Review/update of 6 current curricula (UR, RP, UTAB, INES)
  - Implementation of 2 new programs (RP, INES)
  - Introduce/update RE and smart (IoT) technologies
- **Provide practice-oriented experience:**
  - Implementation/improvement of classroom labs
  - Implementation of 4 Networked Living Labs
- **Mobility:**
  - Students exchanges
  - Staff exchanges
- **Community engagement:**
  - User-centered design approach
  - Effective outreach strategies, aimed at green awareness
  - Business opportunities

GREATER
INES-Ruhengeri Institute of Applied Sciences
UNIVERSITÀ DI PARMA
Erasmus+ Co-funded by the European Union
GLOBAL GOALS WEEK 2025

GREATER project LIVING LABS

*A Living Lab will be an **actual living environment** (home, school, public office, farm, factory,…) where **smart-energy technologies** will be implemented by the project, under the supervision and ownership of participating HEIs. Such sites will serve multiple purpose: **students will be allowed to practice** (thanks to remote connectivity also) **on a realistic scenario**, showing them a comprehensive view of real-word deployment issues. Living labs will be **open to public visits**, so that citizens will access demonstration of low-cost, smart-energy solutions deployed in a familiar environment. Living labs will host **dissemination and transfer initiatives**, providing a key for strengthening **the link between academy and the community**.*

- **Four LL will be implemented**
- **Different use-cases**
  - **IoT technology for remote management and control**
  - **Community hubs, fostering green awareness**

GREATER project SUMMARY

Rwanda-EU cooperation

Bi-directional students and staff mobility

Focus on Renewable Energy and IoT technologies

8 new or renewed Higher Education curricula

User-centered design approach

Living labs

Transfer activities

Community outreach



Ruhengeri

ed Sciences

UNIVERSITÀ DI PARMA

Erasmus+

Co-funded by the European Union

GLOBAL GOALS WEEK 2025

OUTLINE

- SDG Global week
- Introduction to GREATER Project
- **Living Labs**
- INES & Renewable energy: GREATER contribution
- INES Living Lab in Busengo
- Transfer activities
- Challenges and opportunities
- Community outreach

Co-funded by the European Union

GREATER project LIVING LABS

*A Living Lab will be an **actual living environment** (home, school, public office, farm, factory,…) where **smart-energy technologies** will be implemented by the project, under the supervision and ownership of participating HEIs. Such sites will serve multiple purpose: **students will be allowed to practice** (thanks to remote connectivity also) **on a realistic scenario**, showing them a comprehensive view of real-word deployment issues. Living labs will be **open to public visits**, so that citizens will access demonstration of low-cost, smart-energy solutions deployed in a familiar environment. Living labs will host **dissemination and transfer initiatives**, providing a key for strengthening **the link between academy and the community**.*

- **Four LL will be implemented**
- **Different use-cases**
  - **IoT technology for remote management and control**
  - **Community hubs, fostering green awareness**

GREATER LIVING LABS

- **LL1 will be hosted by Parish of Busengo**, Gakenke District, Busengo Sector. A PV power station will be installed to provide electricity to a laboratory where young disadvantaged women are trained for professional work. LL1 deployment and technical management will be taken care of by INES





GREATER

INES-Ruhengeri
Institute of Applied Sciences

UNIVERSITÀ DI PARMA

Erasmus+
Co-funded by the European Union

GOALS WEEK 2025

GREATER LIVING LABS

- **LL2 will be hosted by Parish of Byumba**, Gicumbi District, Byumba Sector, Nyamabuye Cell. A PV power station will be installed to give electricity to classrooms used for charitable services to poor families in the area. UTAB will deal with deployment and technical management.





GREATER LIVING LABS

- **LL3 will be installed in Northern Province, Rulindo District, Muyanza Village**, providing PV power to to a 4-households block of a rural village. RP will manage it.





GREATER
INES-Ruhengeri
Institute of Applied Sciences
UNIVERSITÀ DI PARMA
Erasmus+
Co-funded by the European Union
GLOBAL GOALS WEEK 2025

GREATER LIVING LABS

- **LL4 will be located in Bugesera District, Kigali** area, at an avocado farm. It will be managed by UR.





GREATER

INES-Ruhengeri
Institute of Applied Sciences

UNIVERSITÀ DI PARMA

Erasmus+
Co-funded by the European Union

GLOBAL GOALS WEEK 2025

OUTLINE

- SDG Global week
- Introduction to GREATER Project
- Living Labs
- **INES & Renewable energy: GREATER contribution**
- INES Living Lab in Busengo
- Transfer activities
- Challenges and opportunities
- Community outreach

GREATER

INES-Ruhengeri
Institute of Applied Sciences

UNIVERSITÀ DI PARMA

Erasmus+
Co-funded by the European Union

GLOBAL GOALS WEEK 2025

INES-Ruhengeri's Vision for Renewable Energy

INES-RUHENGERI as Institute of Applied Sciences:

- Initiated a project to become one of the centres of renewable energy research & training in Rwanda
- New curriculum in Renewable Energy under development
  - Integration of IoT and AI in the curriculum
- Strong partnerships with EU universities, NGOs & local stakeholders
  - GREATER PROJECT with EU and Rwandan universities
  - ENGINEERS WITHOUT BORDERS FROM GERMANY
  - Fintec from Finland
- Living Lab model → integrated in teaching & research
- Living Lab model → integrated in teaching & research
- Capacity building

GREATER

INES-Ruhengeri
Institute of Applied Sciences

UNIVERSITÀ DI PARMA

Erasmus+
Co-funded by the European Union

GLOBAL GOALS WEEK 2025

INES-Ruhengeri's Vision for Renewable Energy

INES-RUHENGERI as Institute of Applied Sciences:

- Capacity building for staff and students

- PhD candidate

- summer school in Rwanda and in Europe

- staff and student mobility Rwanda – Europe and Europe-Rwanda for knowledge sharing

- Advanced infrastructure & equipment available for future use

- Lab equipement

- Expansion of Living Lab concept to other sectors (IoT, smart systems)

- Commitment to community outreach & awareness

- Living lab initiated in rural areas: Busengo in Gakenke District

- New opportunities for education & research

- Long-term impact on Rwanda's sustainable development

GREATER

INES-Ruhengeri
Institute of Applied Sciences

UNIVERSITÀ DI PARMA

Erasmus+
Co-funded by the European Union

GLOBAL GOALS WEEK 2025

OUTLINE

- SDG Global week
- Introduction to GREATER Project
- Living Labs
- INES & Renewable energy: GREATER contribution
- **INES Living Lab in Busengo**
- Transfer activities
- Challenges and opportunities
- Community outreach

GREATER
INES-Ruhengeri
Institute of Applied Sciences
UNIVERSITÀ DI PARMA
Erasmus+
Co-funded by the European Union
GLOBAL GOALS WEEK 2025

GREATER

GROWING RWANDA ENERGY AWARENESS THROUGH HIGHER EDUCATION

Co-funded by the
Erasmus+ Programme
of the European Union

INES Living Lab in Busengo

Mirco Mongilli

INES-Ruhengeri

Institute of Applied Sciences

UNIVERSITÀ DI PARMA

Ecosystem architecture

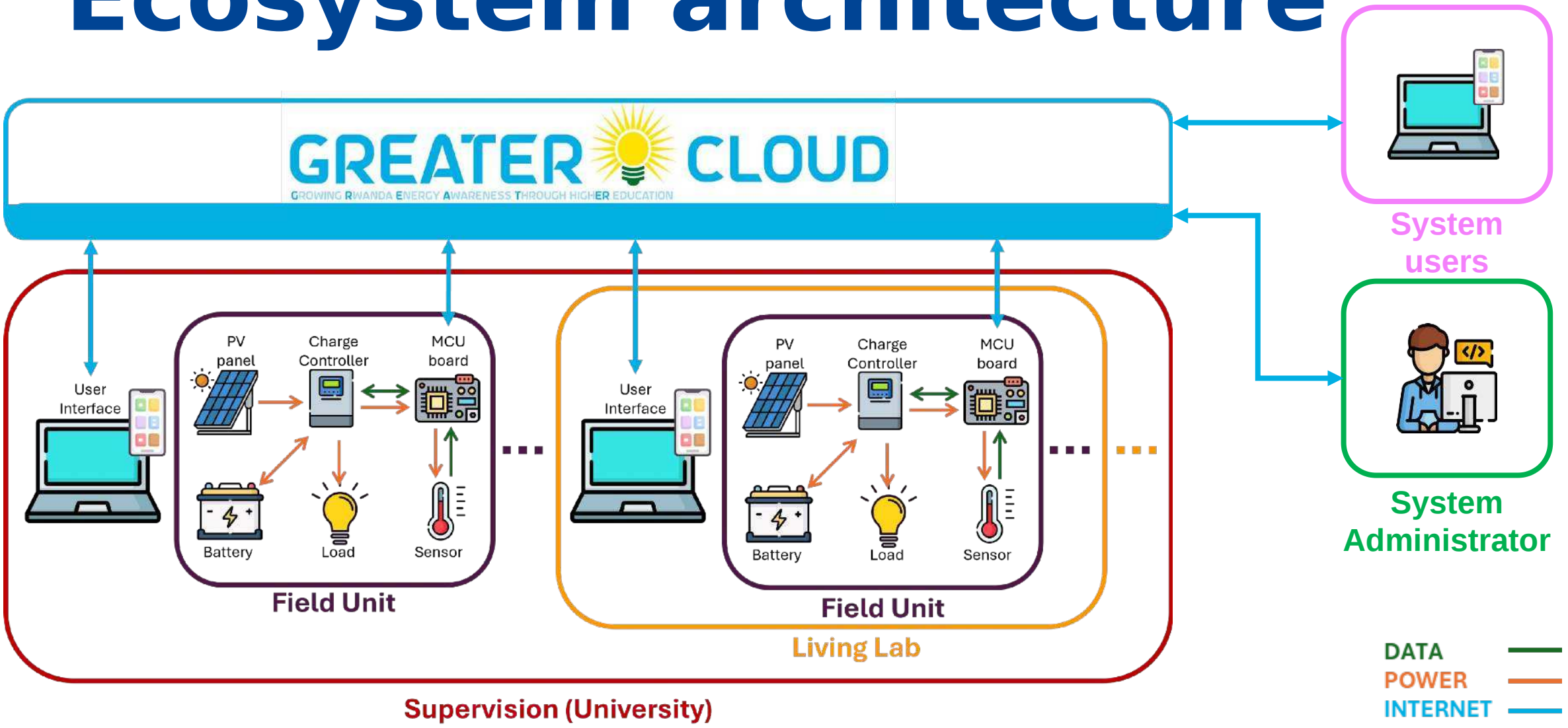

Busengo nanogrid

A. Butchery

B. Training centre

C. Parish house

D. Church



Busengo nanogrid

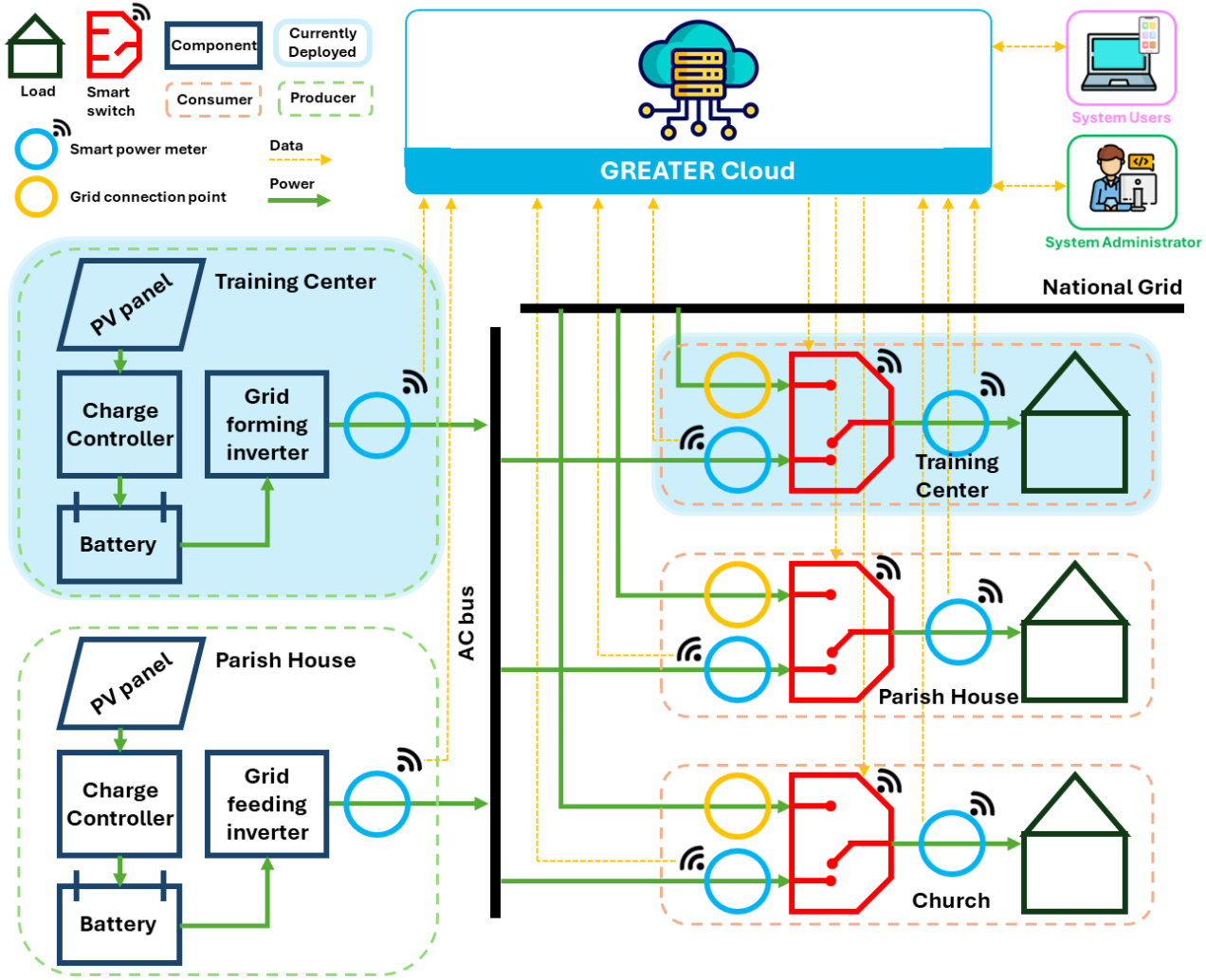

Busengo nanogrid

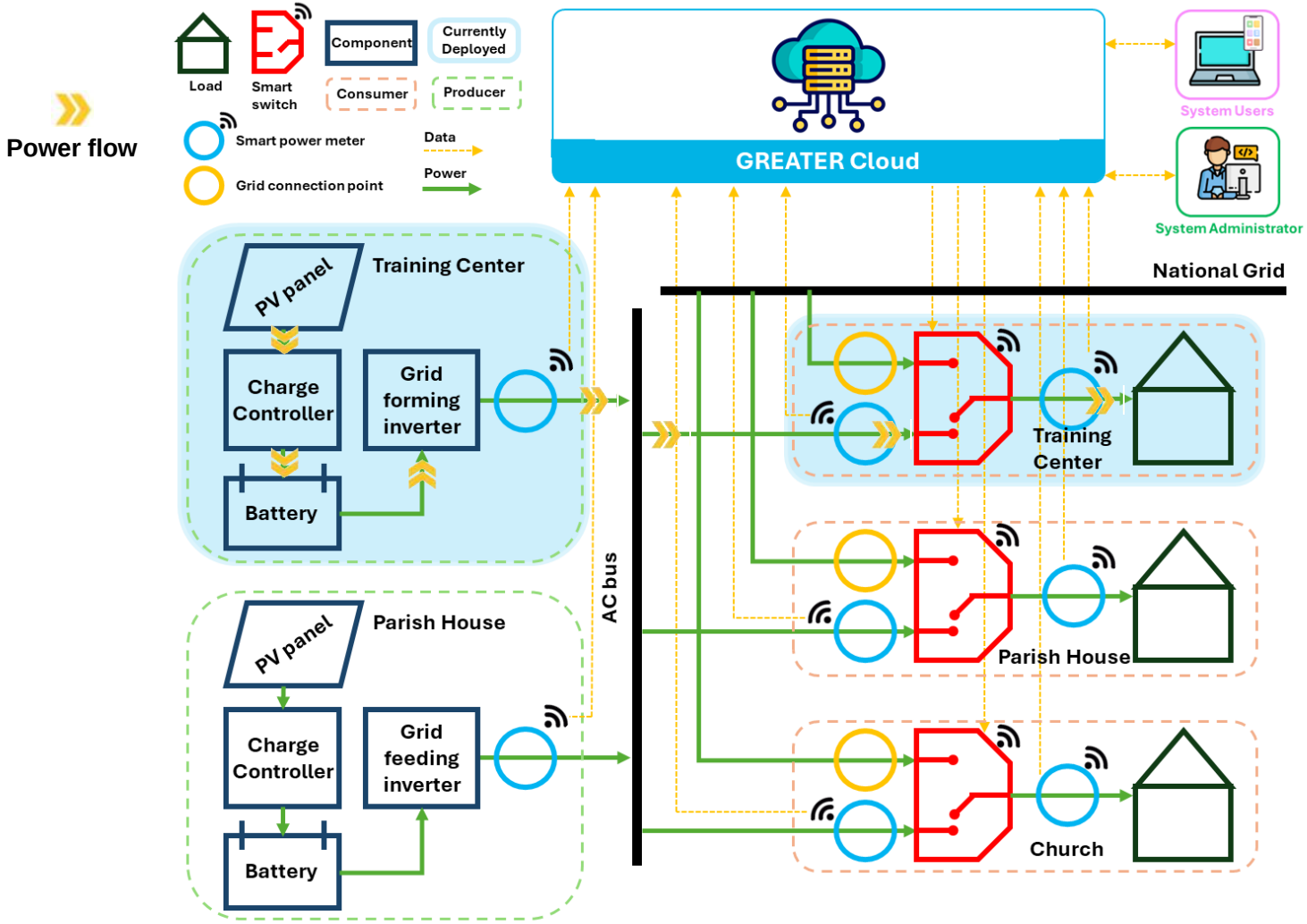

Busengo nanogrid

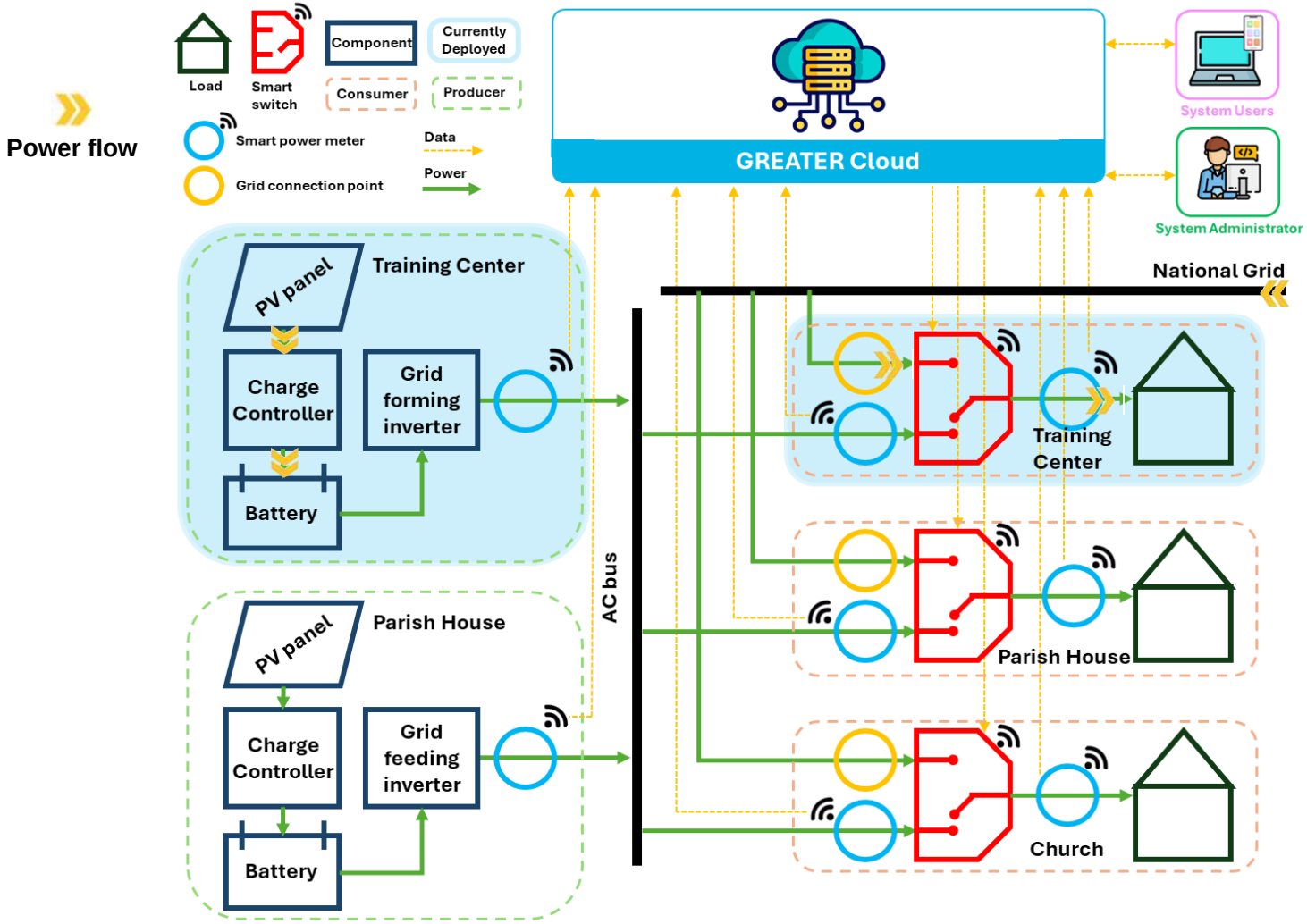

Busengo nanogrid

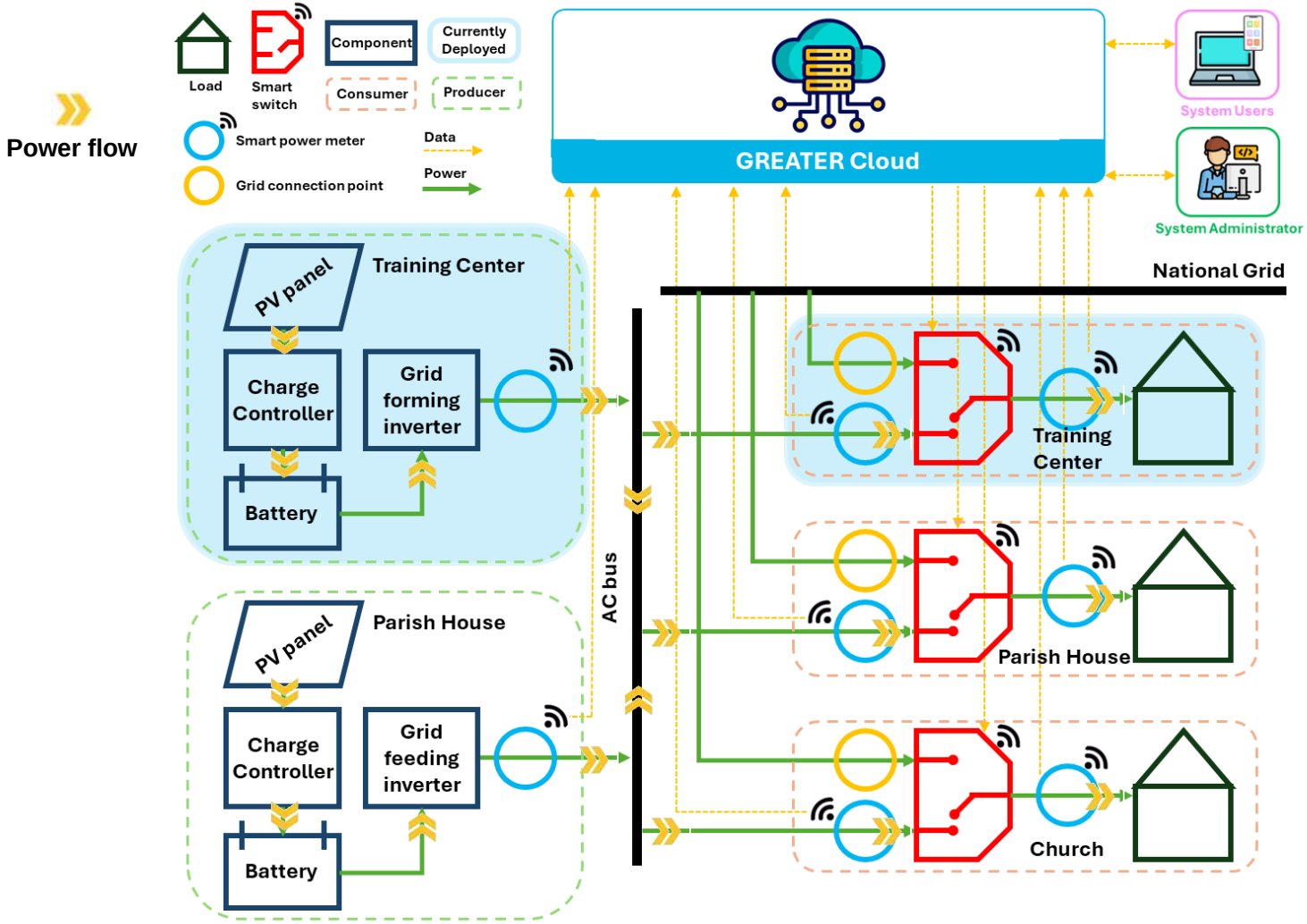

Busengo nanogrid

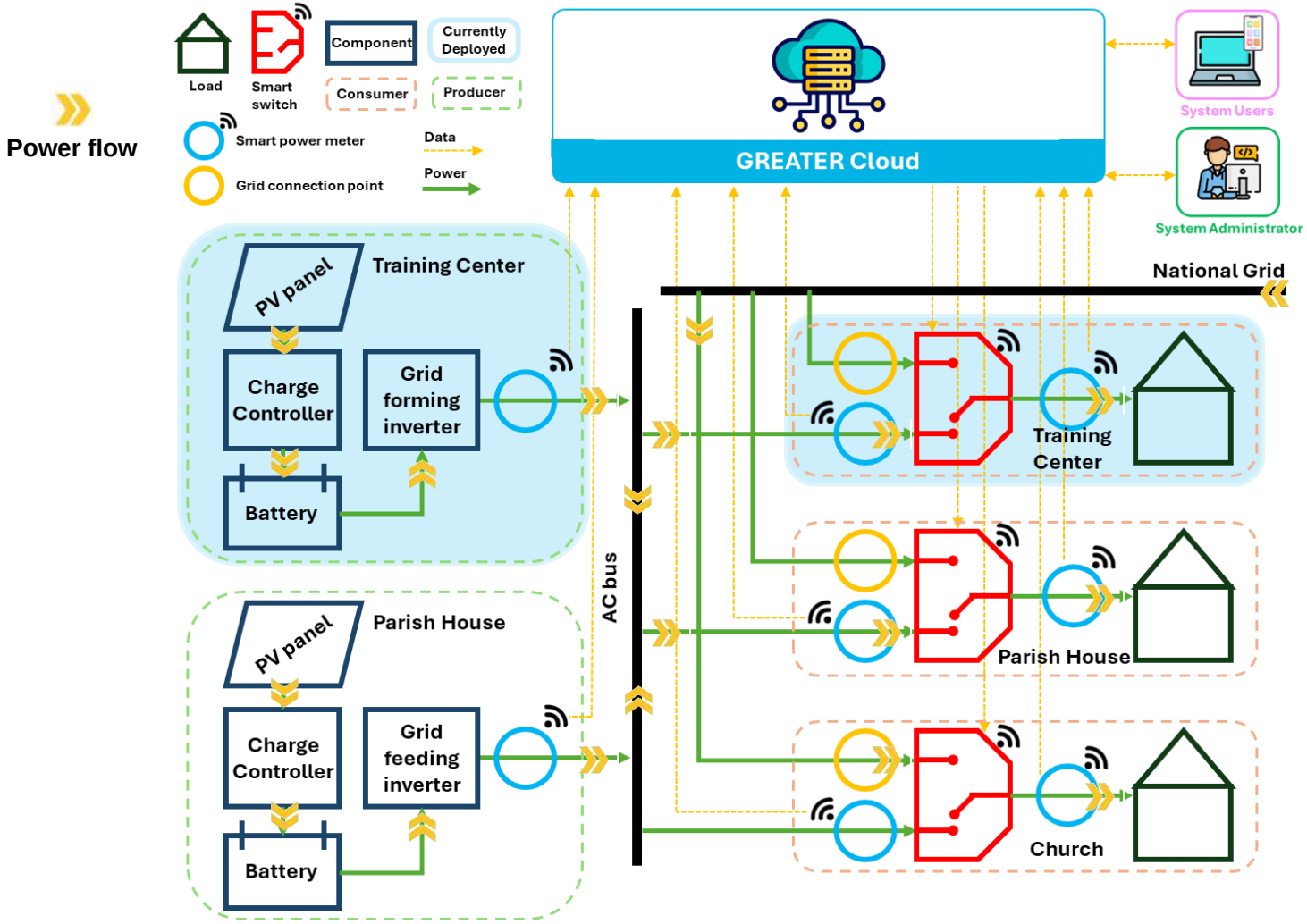

GREATER

GROWING RWANDA ENERGY AWARENESS THROUGH HIGHER EDUCATION

Co-funded by the
Erasmus+ Programme
of the European Union

Busengo Living Lab

Mirco Mongilli

INES-Ruhengeri

Institute of Applied Sciences

UNIVERSITÀ DI PARMA

OUTLINE

- SDG Global week
- Introduction to GREATER Project
- Living Labs
- INES & Renewable energy: GREATER contribution
- INES Living Lab in Busengo
- **Transfer activities**
- Challenges and opportunities
- Community outreach

GREATER
INES-Ruhengeri
Institute of Applied Sciences
UNIVERSITÀ DI PARMA
Erasmus+
Co-funded by the European Union
GLOBAL GOALS WEEK 2025

GREATER - SDG Global Goal Week @ INES-RUHENGERI

Transfer activities: Art Competition 2025

Deadline: 31st December 2025

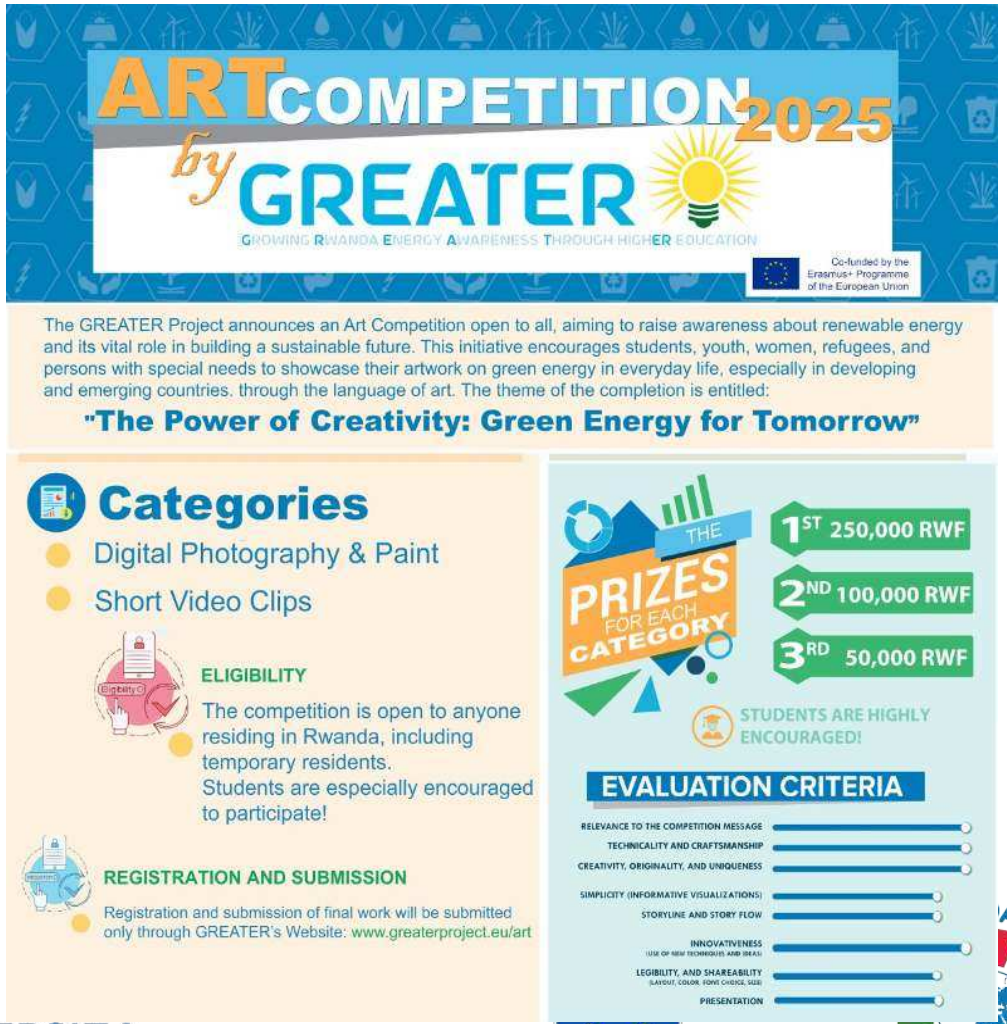

GREATER

INES-Ruhengeri
Institute of Applied Sciences

UNIVERSITA DI PARMA

Erasmus+
Co-funded by the European Union

2025

GREATER - Transfer activities: ATINGI C...

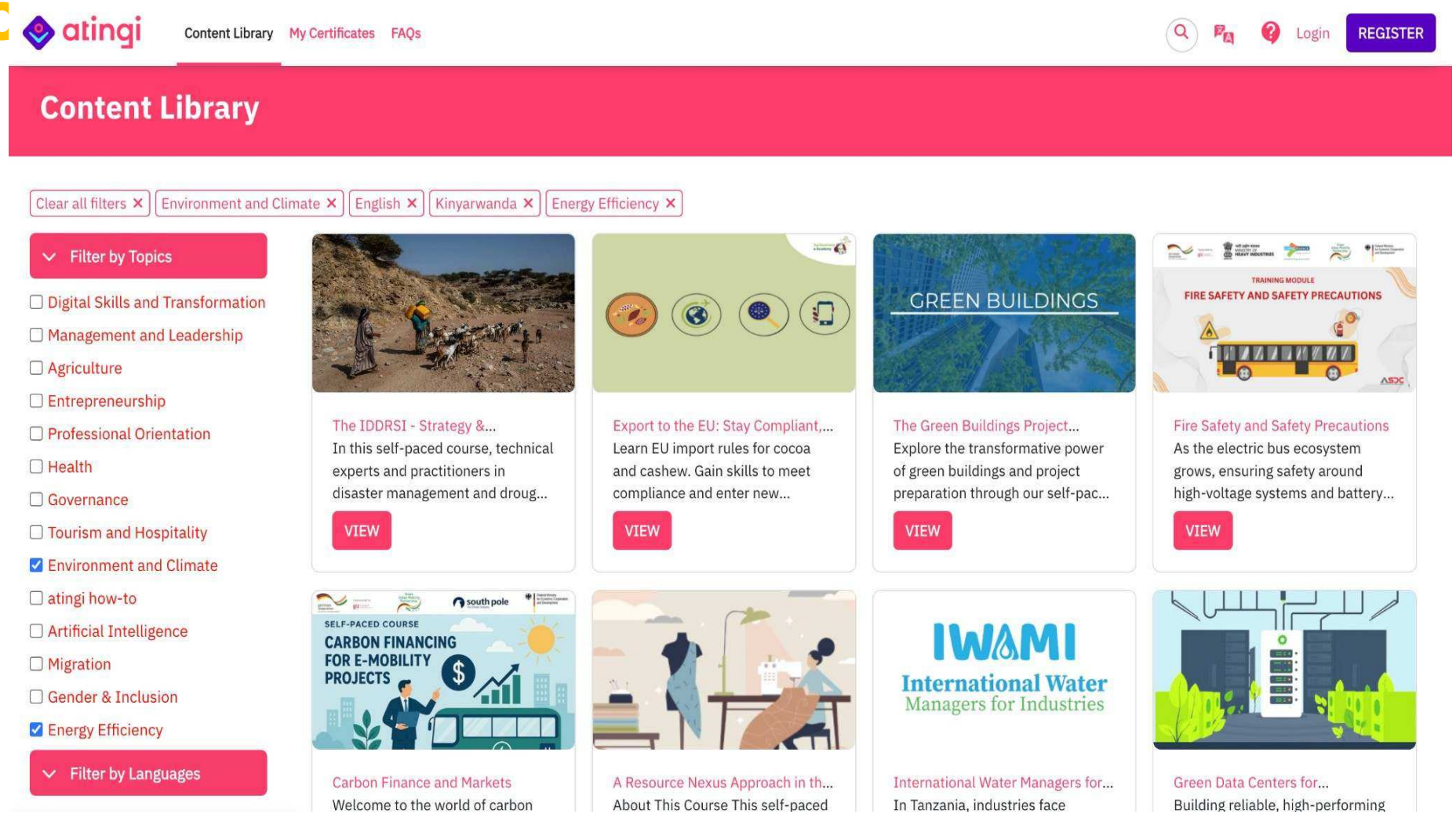

GREATER

INES-Ruhengeri
Institute of Applied Sciences

UNIVERSITÀ DI PARMA

Erasmus+
Co-funded by the European Union

GLOBAL GOALS WEEK 2025

GREATER - Transfer activities: ATINGI online course



Climate change - Our Planet at Risk

About this course

Perhaps you have heard about climate change? It is causing temperatures and the sea level to rise in some parts of the world while leading to natural disasters, such as hurricanes, melting glaciers, flooding and extreme drought in other parts of the world.

In this course, we will explore the impact of climate change on planet Earth. To do that, we will start by identifying what has made the Earth particularly suitable for human development over the past 10-12.000 years. Then we will explore how and why these favourable conditions are under threat. We will also look at what must be done to reverse such threats. Luckily, there is a lot we can do about climate change. While the bulk of responsibility lies with the people in power, we can all do a lot to reduce our contribution to climate change.

Perhaps you will get new and exciting ideas for actions towards a sustainable future

Who is this course for?
The course is for students aged 16 and up

What will you learn?
By the end of this course, you will be able to explain:

- Why the Holoscene period provided a particularly stable climate
- Why some scientists claim we are moving into a new geological epoch called the Anthropocene
- What climate mitigation means and why all mitigation efforts are important
- What climate adaptation means and why all adaptation efforts are important

GREATER

INES-Ruhengeri
Institute of Applied Sciences

UNIVERSITÀ DI PARMA

Erasmus+
Co-funded by the European Union

GLOBAL ALS WEEK 2025

OUTLINE

- SDG Global week
- Introduction to GREATER Project
- Living Labs
- INES & Renewable energy: GREATER contribution
- INES Living Lab in Busengo
- Transfer activities
- **Challenges and opportunities**
- Community outreach

Co-funded by the European Union

CHALLENGES & OPPORTUNITIES

- The GREATER project legacy will provide important support to the newly established Department of Renewable Energy, as well as the Department of Computer Science
- Among the most concrete (though unusual) results is the implementation of the Busengo **Living Lab**, which is now available for the teaching and research needs of INES.
- To get the most out of this new resource, it's necessary to spread knowledge about it, including its motivations and possible uses

CHALLENGES & OPPORTUNITIES

- First, it is necessary to include the new possibilities offered by the Living Lab in the curricula of Renewable Energy and Computer Science students.
- But the Living Lab is not just a testbed for new electrical and electronic technologies, but also a highly interdisciplinary experiment, open to a much wider range of activities.
- The fundamental theme of the Living Lab is **how to make new technologies accessible and effective for the community, even for those most distant (geographically and culturally) from the academic context.**

CHALLENGES & OPPORTUNITIES

- In the specific case of the Busengo Living Lab, INES has established a relationship with an extremely poor rural community, which falls outside the logic of productive economic investment, thus not benefitting from the country's technological and economic progress.
- This poses a strong call to our academic social responsibility (third mission), inspiring our capacity of studying the tools to ferry the community toward more promising and sustainable scenarios.

CHALLENGES & OPPORTUNITIES

- Providing clean and affordable energy is an important first step toward the community's empowerment, but the situation is much more complex, involving social, sociological, economic, and many other aspects
- The relationship with Busengo, however challenging, represents a valuable opportunity to develop teaching and research activities on the topic of rural community development and sustainability, and the role that new technologies can play in it.

CHALLENGES & OPPORTUNITIES

- A non-exhaustive list of possible topics includes:
  - Models for economic development
  - Improving hygiene and nutrition practices
  - Clean cooking technologies
  - Tools to combat school dropout rates
  - Digital literacy
  - Access to digital services
  - …
- Above points may foster research activitiese , as well as provide opportunities for internships or theses for students across various disciplines.
- At the same time, they offer a valuable chance to connect academic training with the ability to build relationships with others, which is essential for students' personal and professional growth.

GREATER

INES-Ruhengeri
Institute of Applied Sciences

UNIVERSITÀ DI PARMA

Erasmus+
Co-funded by the European Union

GLOBAL GOALS WEEK 2025

OUTLINE

- SDG Global week
- Introduction to GREATER Project
- Living Labs
- INES & Renewable energy: GREATER contribution
- INES Living Lab in Busengo
- Transfer activities
- Challenges and opportunities
- **Community outreach**

Co-funded by the European Union

COMMUNITY OUTREACH

- Fr. Regis Bagerageza





GREATER
INES-Ruhengeri
Institute of Applied Sciences
UNIVERSITÀ DI PARMA
Erasmus+
Co-funded by the European Union
GLOBAL GOALS WEEK 2025

GREATER

Erasmus+

Co-funded by the European Union

GROWING RWANDA ENERGY AWARENESS THROUGH HIGHER EDUCATION

September 17, 2025

BEYOND THE GRID: Renewables, IOT and SOCIAL EMPOWERMENT

INES-Ruhengeri

Institute of Applied Sciences

GLOBAL GOALS WEEK 2025